Series JBB/4

SET-1

कोड नं.
Code No. **30/4/1**

रोल नं.
Roll No.

परीक्षार्थी कोड को उत्तर-पुस्तिका के मुख-पृष्ठ पर अवश्य लिखें ।

Candidates must write the Code on the title page of the answer-book.

	नोट		NOTE
(I)	कृपया जाँच कर लें कि इस प्रश्न-पत्र में मुद्रित पृष्ठ **23** हैं ।	(I)	Please check that this questio paper contains **23** printed pages.
(II)	प्रश्न-पत्र में दाहिने हाथ की ओर दिए गए कोड नम्बर को छात्र उत्तर-पुस्तिका के मुख-पृष्ठ पर लिखें ।	(II)	Code number given on the righ hand side of the question pape should be written on the title page o the answer-book by the candidate.
(III)	कृपया जाँच कर लें कि इस प्रश्न-पत्र में **40** प्रश्न हैं ।	(III)	Please check that this questio paper contains **40** questions.
(IV)	कृपया प्रश्न का उत्तर लिखना शुरू करने से पहले, उत्तर-पुस्तिका में प्रश्न का क्रमांक अवश्य लिखें ।	(IV)	Please write down the Seria Number of the question in th answer-book before attempting it.
(V)	इस प्रश्न-पत्र को पढ़ने के लिए 15 मिनट का समय दिया गया है । प्रश्न-पत्र का वितरण पूर्वाह्न में 10.15 बजे किया जाएगा । 10.15 बजे से 10.30 बजे तक छात्र केवल प्रश्न-पत्र को पढ़ेंगे और इस अवधि के दौरान वे उत्तर-पुस्तिका पर कोई उत्तर नहीं लिखेंगे ।	(V)	15 minute time has been allotted t read this question paper. Th question paper will be distribute at 10.15 a.m. From 10.15 a.m. t 10.30 a.m., the students will read th question paper only and will no write any answer on th answer-book during this period.

गणित (मानक) – सैद्धान्तिक

MATHEMATICS (STANDARD) – Theory

निर्धारित समय : 3 घण्टे — *अधिकतम अंक : 8*

Time allowed : 3 hours — *Maximum Marks : 8*

General Instructions :

Read the following instructions very carefully and strictly follow them :

(i) *This question paper comprises* ***four*** *sections – A, B, C and D. This question paper carries* ***40*** *questions. All questions are* ***compulsory****.*

(ii) ***Section A*** *: Question Numbers* ***1*** *to* ***20*** *comprises of* ***20*** *questions of* ***one*** *mark each.*

(iii) ***Section B*** *: Question Numbers* ***21*** *to* ***26*** *comprises of* ***6*** *questions of* ***two*** *marks each.*

(iv) ***Section C*** *: Question Numbers* ***27*** *to* ***34*** *comprises of* ***8*** *questions of* ***three*** *marks each.*

(v) ***Section D*** *: Question Numbers* ***35*** *to* ***40*** *comprises of* ***6*** *questions of* ***four*** *marks each.*

(vi) *There is no overall choice in the question paper. However, an internal choice has been provided in 2 questions of one mark, 2 questions of two marks, 3 questions of three marks and 3 questions of four marks. You have to attempt only one of the choices in such questions.*

(vii) *In addition to this, separate instructions are given with each section and question, wherever necessary.*

(viii) *Use of calculators is* ***not*** *permitted.*

SECTION A

Question numbers 1 to 20 carry 1 mark each.

Question numbers 1 to 10 are multiple choice questions.

Choose the correct option.

1. The number of zeroes for a polynomial p(x) where graph of y = p(x) is given in Figure-1, is

(A) 3

(B) 4

(C) 0

(D) 5

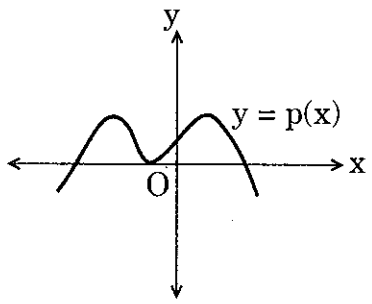

Figure-1

2. The first term of an A.P. is 5 and the last term is 45. If the sum of all the terms is 400, the number of terms is

(A) 20

(B) 8

(C) 10

(D) 16

OR

The 9th term of the A.P. – 15, – 11, – 7, ..., 49 is

(A) 32

(B) 0

(C) 17

(D) 13

3. It is being given that the points A(1, 2), B(0, 0) and C(a, b) are collinear. Which of the following relations between a and b is true ?

(A) $a = 2b$

(B) $2a = b$

(C) $a + b = 0$

(D) $a - b = 0$

4. In Figure-2, TP and TQ are tangents drawn to the circle with centre at O. If $\angle POQ = 115°$ then $\angle PTQ$ is

(A) 115°

(B) 57·5°

(C) 55°

(D) 65°

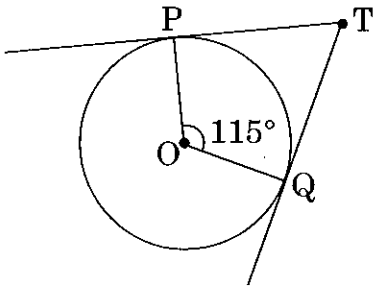

Figure-2

OR

From an external point Q, the length of the tangent to a circle is 5 cm and the distance of Q from the centre is 8 cm. The radius of the circle is

(A) 39 cm

(B) 3 cm

(C) $\sqrt{39}$ cm

(D) 7 cm

5. The value of θ for which $\cos(10° + \theta) = \sin 30°$, is

(A) 50°

(B) 40°

(C) 80°

(D) 20°

6. A bag contains 3 red, 5 black and 7 white balls. A ball is drawn from the bag at random. The probability that the ball drawn is not black, is

(A) $\frac{1}{3}$

(B) $\frac{9}{15}$

(C) $\frac{5}{10}$

(D) $\frac{2}{3}$

7. The pair of linear equations $y = 0$ and $y = -6$ has

(A) a unique solution

(B) no solution

(C) infinitely many solutions

(D) only solution (0, 0)

8. The mean and median of a distribution are 14 and 15 respectively. The value of mode is

(A) 16

(B) 17

(C) 18

(D) 13

9. The quadratic equation $x^2 - 4x + k = 0$ has distinct real roots if

(A) $k = 4$

(B) $k > 4$

(C) $k = 16$

(D) $k < 4$

10. Point $P\left(\frac{a}{8}, 4\right)$ is the mid-point of the line segment joining the points A(– 5, 2) and B(4, 6). The value of 'a' is

(A) – 4

(B) 4

(C) – 8

(D) – 2

Fill in the blanks in question numbers 11 to 15.

11. $\left(\frac{2+\sqrt{5}}{3}\right)$ is _____ number.

12. Let Δ ABC ~ Δ DEF and their areas be respectively 81 cm^2 and 144 cm^2. If EF = 24 cm, then length of side BC is _____ cm.

13. The distance between the points (a, b) and (– a, – b) is _____ .

14. If tan A =1, then 2 sin A cos A = _____ .

15. A spherical metal ball of radius 8 cm is melted to make 8 smaller identical balls. The radius of each new ball is _____ cm.

Answer the following question numbers 16 to 20.

16. Given that HCF (135, 225) = 45, find the LCM (135, 225).

17. In Figure-3, a tightly stretched rope of length 20 m is tied from the top of a vertical pole to the ground. Find the height of the pole if the angle made by the rope with the ground is 30°.

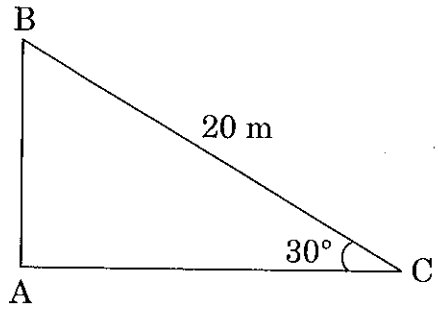

Figure-3

18. Two dice are thrown simultaneously. What is the probability that the sum of the two numbers appearing on the top is 13 ?

19. After how many decimal places will the decimal representation of the rational number $\frac{229}{2^2 \times 5^7}$ terminate ?

20. In Figure-4, AB and CD are common tangents to circles which touch each other at D. If AB = 8 cm, then find the length of CD.

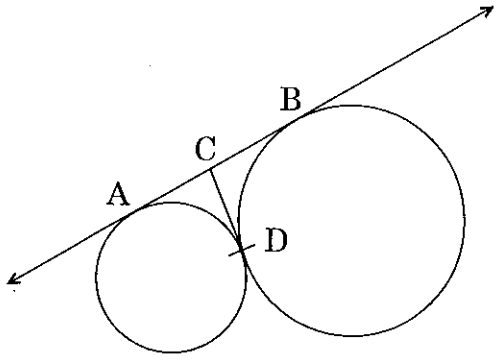

Figure-4

SECTION B

Question numbers 21 to 26 carry 2 marks each.

21. Solve for x :

$$6x^2 + 11x + 3 = 0$$

22. The perimeters of two similar triangles are 30 cm and 20 cm respectively. If one side of the first triangle is 9 cm long, find the length of the corresponding side of the second triangle.

OR

In Figure-5, Δ PQR is right-angled at P. M is a point on QR such that PM is perpendicular to QR. Show that $PQ^2 = QM \times QR$.

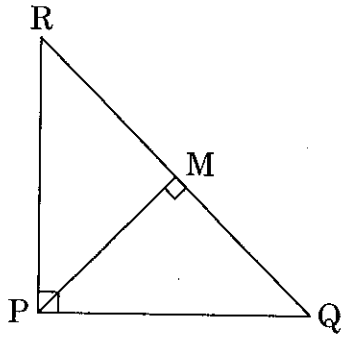

Figure-5

23. Evaluate :

$$\left(\frac{\sin 47^\circ}{\cos 43^\circ}\right)^2 + \left(\frac{\cos 30^\circ}{\cot 30^\circ}\right)^2 - (\sin 60^\circ)^2$$

24. Find the mode of the following distribution :

Classes :	0 – 20	20 – 40	40 – 60	60 – 80	80 – 100
Frequency :	10	8	12	16	4

OR

From the following distribution, find the median :

Classes :	500 – 600	600 – 700	700 – 800	800 – 900	900 – 1000
Frequency :	36	32	32	20	30

25. In Figure-6, a tent is in the shape of a cylinder surmounted by a conical top. The cylindrical part is 2·1 m high and conical part has slant height 2·8 m. Both the parts have same radius 2 m. Find the area of the canvas used to make the tent. (Use $\pi = \frac{22}{7}$)

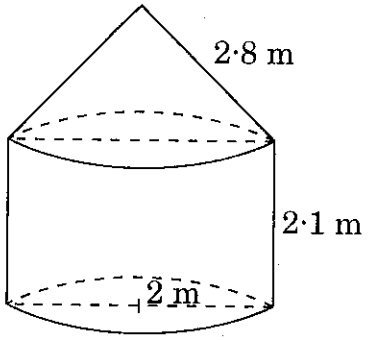

Figure-6

26. **Tree Plantation Drive**

A Group Housing Society has 600 members, who have their houses in the campus and decided to hold a Tree Plantation Drive on the occasion of New Year. Each household was given the choice of planting a sampling of its choice. The number of different types of saplings planted were :

(i) Neem – 125

(ii) Peepal – 165

(iii) Creepers – 50

(iv) Fruit plants – 150

(v) Flowering plants – 110

On the opening ceremony, one of the plants is selected randomly for a prize. After reading the above passage, answer the following questions.

What is the probability that the selected plant is

(i) A fruit plant or a flowering plant ?

(ii) Either a Neem plant or a Peepal plant ?

SECTION C

Question numbers 27 to 34 carry 3 marks each.

27. Prove that $\sqrt{5}$ is an irrational number.

28. The sum of the first 30 terms of an A.P. is 1920. If the fourth term is 18, find its 11th term.

29. Find the co-ordinates of the points of trisection of the line segment joining the points (3, – 1) and (6, 8).

OR

Find the area of a quadrilateral ABCD having vertices at A(1, 2), B(1, 0), C(4, 0) and D(4, 4).

30. In Figure-7, XY and MN are two parallel tangents to a circle with centre O and another tangent AB with point of contact C intersecting XY at A and MN at B. Prove that $\angle AOB = 90°$.

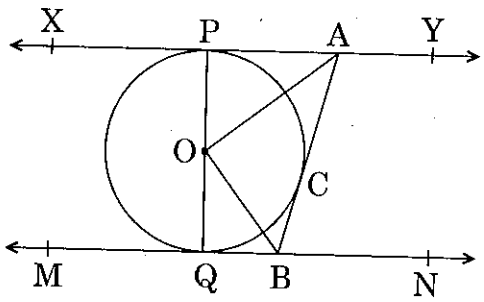

Figure-7

31. Solve the pair of equations :

$$\frac{2}{x} + \frac{3}{y} = 11, \quad \frac{5}{x} - \frac{4}{y} = -7$$

Hence, find the value of 5x – 3y.

OR

Taxi charges in a city consist of fixed charges and the remaining charges depend upon the distance travelled. For a journey of 10 km, the charge paid is ₹ 75 and for a journey of 15 km, the charge paid is ₹ 110. Find the fixed charge and charges per km. Hence, find the charge of covering a distance of 35 km.

32. Prove that :

$$\frac{\sin\theta - \cos\theta + 1}{\cos\theta + \sin\theta - 1} = \frac{1}{\sec\theta - \tan\theta}$$

33. In Figure-8, find the area of the shaded region where a circular arc of radius 7 cm has been drawn with vertex O of an equilateral triangle OAB of side 14 cm as centre. (Use $\pi = \frac{22}{7}$ and $\sqrt{3} = 1{\cdot}73$)

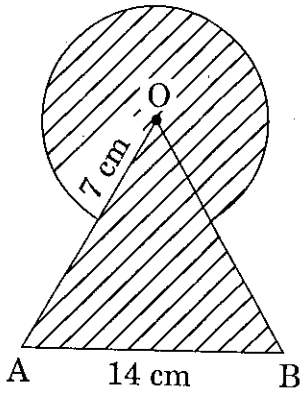

Figure-8

34. Construct a triangle with sides 5 cm, 6 cm and 7 cm. Now construct another triangle whose sides are $\frac{2}{3}$ times the corresponding sides of the first triangle.

OR

Draw a pair of tangents to a circle of radius 3 cm which are inclined to each other at an angle of 60°.

SECTION D

Question numbers 35 to 40 carry 4 marks each.

35. In a flight of 600 km, the speed of the aircraft was slowed down due to bad weather. The average speed of the trip was decreased by 200 km/hr and thus the time of flight increased by 30 minutes. Find the average speed of the aircraft originally.

OR

₹ 9,000 were divided equally among a certain number of persons. Had there been 20 more persons, each would have got ₹ 160 less. Find the original number of persons.

36. Draw a 'more than' cumulative frequency curve for the following distribution. Also, find the median from the graph.

Weight (in kg) :	40 – 44	44 – 48	48 – 52	52 – 56	56 – 60	60 – 64	64 – 68
Number of Students :	7	12	33	47	20	11	5

37. If a line is drawn parallel to one side of a triangle to intersect the other two sides in distinct points, then prove that the other two sides are divided in the same ratio.

OR

In a right-angled triangle, prove that the square of the hypotenuse is equal to the sum of the squares of the other two sides.

38. A straight highway leads to the foot of a tower. A man standing at the top of the tower observes a car at an angle of depression of 30°, which is approaching the foot of the tower with a uniform speed. After covering a distance of 50 m, the angle of depression of the car becomes 60°. Find the height of the tower. (Use $\sqrt{3} = 1{\cdot}73$).

39. A bucket open at the top has top and bottom radii of circular ends as 40 cm and 20 cm respectively. Find the volume of the bucket if its depth is 21 cm. Also find the area of the tin sheet required for making the bucket. (Use $\pi = \frac{22}{7}$)

40. Obtain other zeroes of the polynomial

$$f(x) = 2x^4 + 3x^3 - 5x^2 - 9x - 3$$

if two of its zeroes are $\sqrt{3}$ and $-\sqrt{3}$.

OR

Without actually calculating the zeroes, form a quadratic polynomial whose zeroes are reciprocals of the zeroes of the polynomial $5x^2 + 2x - 3$.